DocuSign Envelope ID: 09242CDB-4737-4D55-85A0-500DB8CB0DBF

PROJECT REFERENCE NO.	SHEET NO.
17BP.5.R.70 - FRANKLIN 28	2C-1
DOCUMENT NOT CONSIDERED FINAL UNLESS ALL SIGNATURES COMPLETED	

STATE OF
NORTH CAROLINA
DEPT. OF TRANSPORTATION
DIVISION OF HIGHWAYS
RALEIGH, N.C.

ROADWAY DETAIL DRAWING FOR
GUARDRAIL INSTALLATION

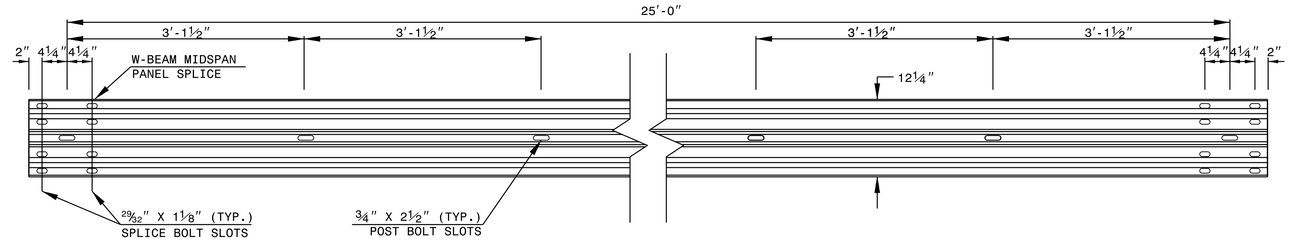

STANDARD W-BEAM GUARDRAIL

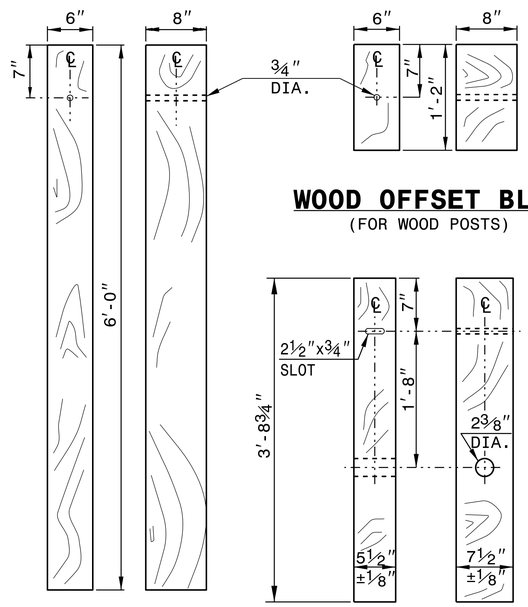

STANDARD LINE POST

SHORT WOOD BREAKAWAY POST

WOOD OFFSET BLOCK

(FOR WOOD POSTS)

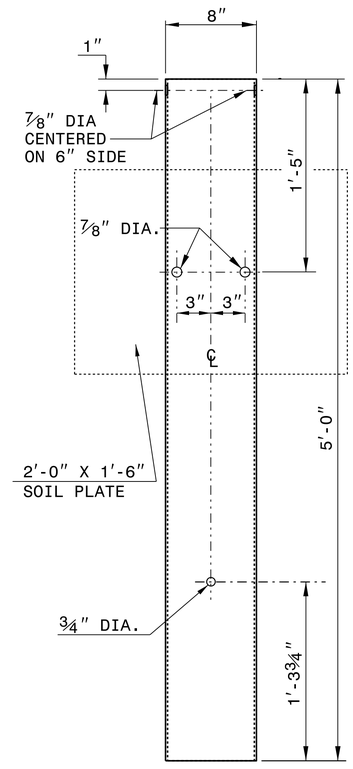

STEEL TUBE

TS 6"x8"x0.1875"

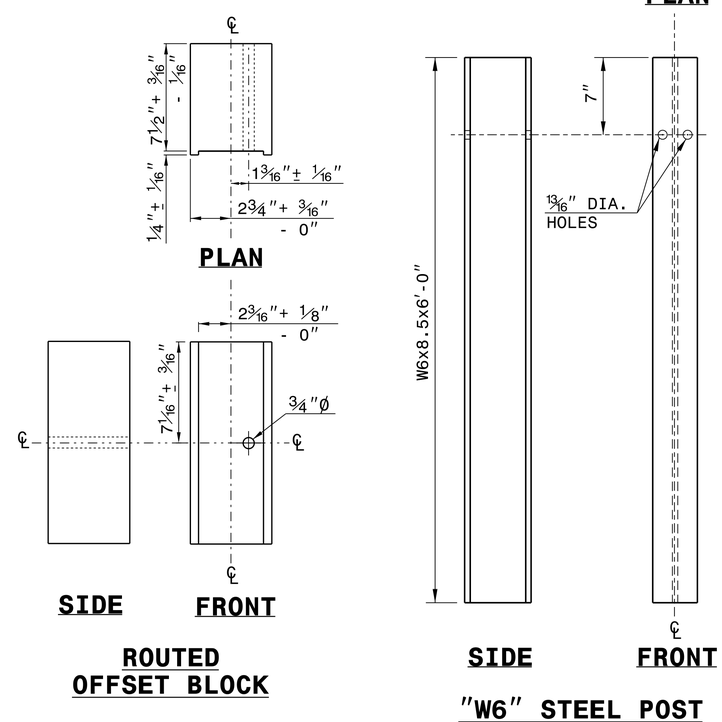

SYSTEM PARTS

SHEET 6 OF 8
862D02

STATE OF
NORTH CAROLINA
DEPT. OF TRANSPORTATION
DIVISION OF HIGHWAYS
RALEIGH, N.C.

ROADWAY DETAIL DRAWING FOR
GUARDRAIL INSTALLATION

SHEET 6 OF 8
862D02

NORTH CAROLINA PROFESSIONAL SEAL 022966 ENGINEER JAMES S. HOWERTON
DocuSigned by: James S. Howerton
3/22/2019

CONTRACTS STANDARDS AND DEVELOPMENT UNIT
Office 919-707-6950 FAX 919-250-4119

SEE TITLE BLOCK

ORIGINAL BY: J.HOWERTON DATE: 3-7-2018
MODIFIED BY: DATE:
CHECKED BY: DATE:
FILE SPEC.: