DocuSign Envelope ID: 946B6E87-D7EB-469E-89EF-1D91CA9D6A95

7/8/2021 2:05:34 PM G:\Projects\2016\Division 5 (Mott Macdonald)\17BP5R70 Franklin #28 (90 21CS VCB)\Structures\Drawings\Final\401_17BP5R70_SMULEB.dgn

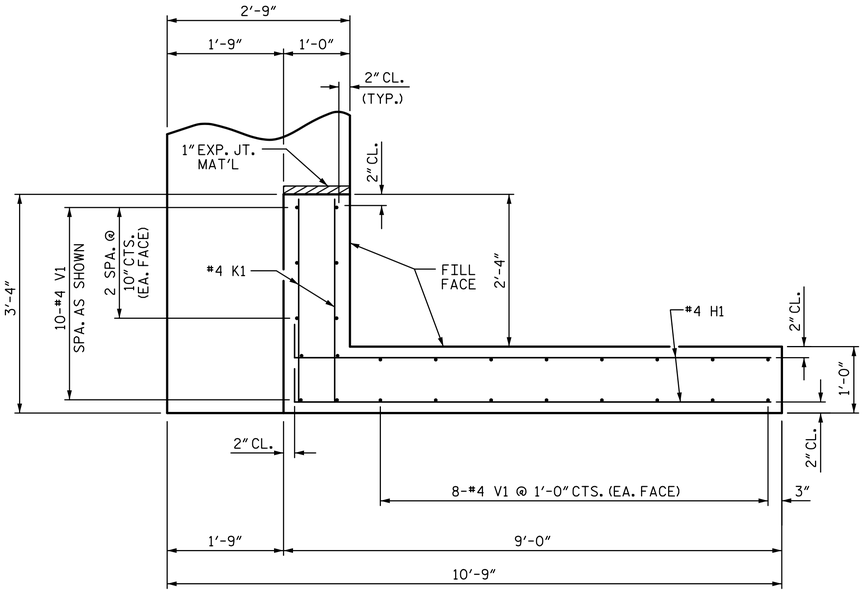

PLAN OF WING (W1)

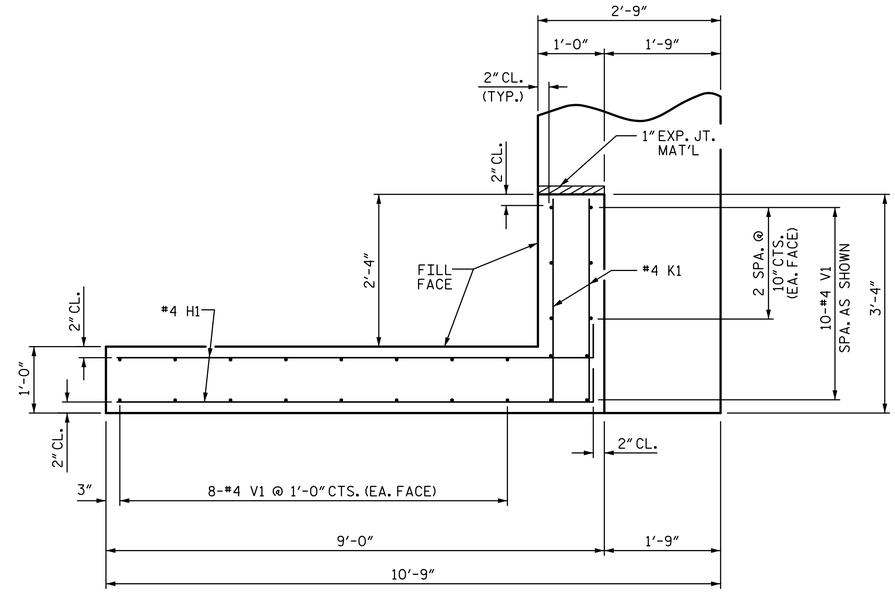

PLAN OF WING (W2)

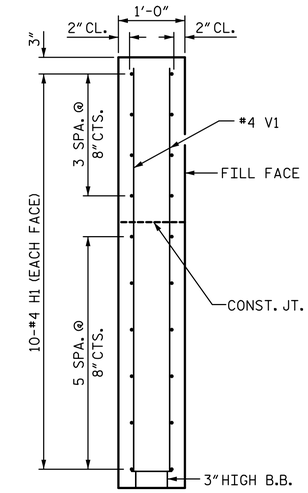

SECTION X-X

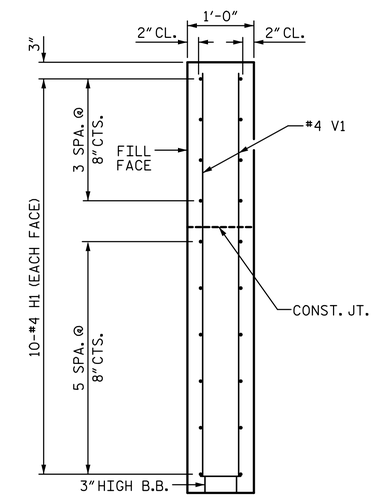

SECTION Y-Y

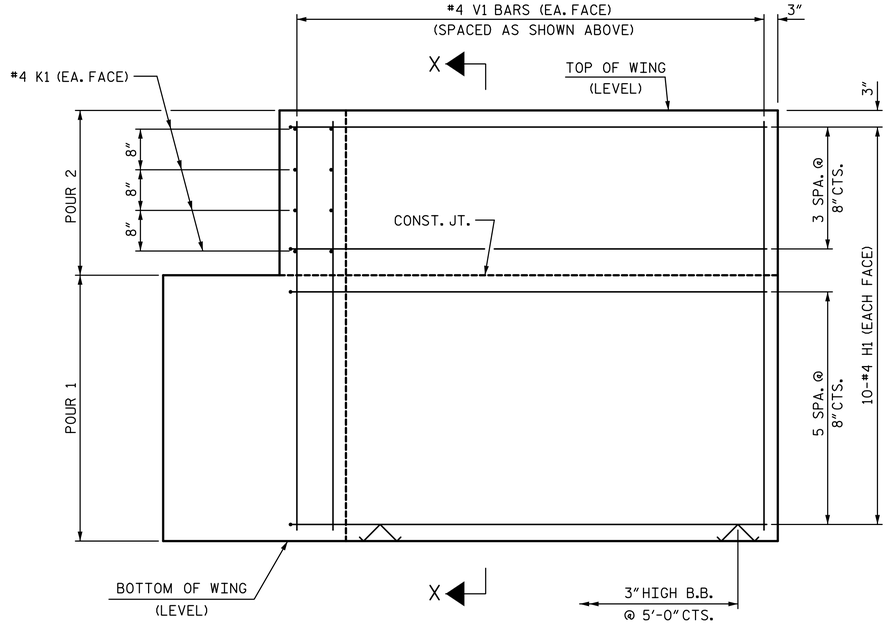

ELEVATION OF WING (W1)

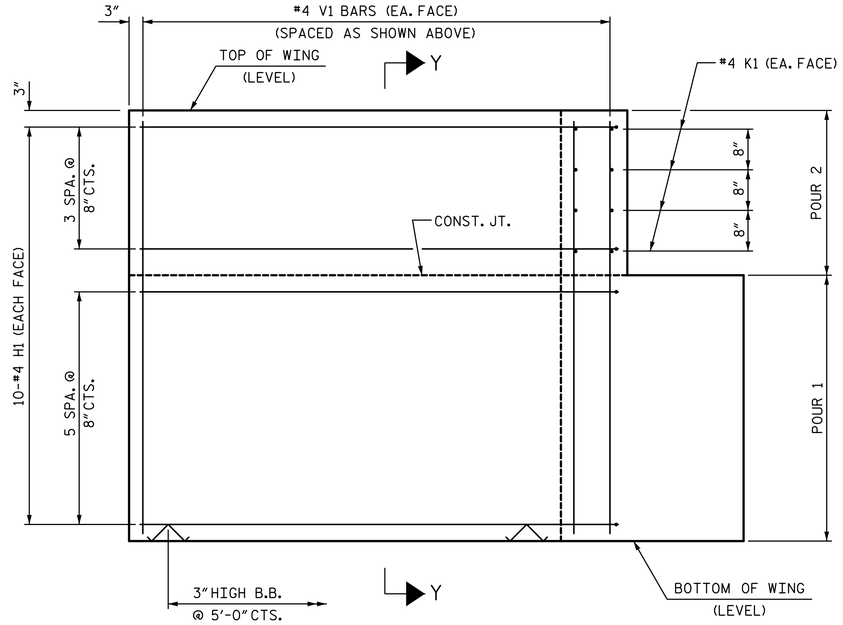

ELEVATION OF WING (W2)

WING DETAILS

PROJECT NO. 17BP.5.R.70
FRANKLIN COUNTY
STATION: 13+96.50 -L-

SHEET 3 OF 4

STATE OF NORTH CAROLINA
DEPARTMENT OF TRANSPORTATION
RALEIGH
SUBSTRUCTURE

END BENT
WING DETAILS

PLANS PREPARED BY:
SIMPSON ENGINEERS & ASSOCIATES
5640 Dillard Drive
Suite 200
Cary, NC 27518
(919) 852-0468
(919) 852-0598 (Fax)
www.simpsonengr.com
LICENSURE NO. C-2521

NORTH CAROLINA PROFESSIONAL SEAL 11268 ENGINEER BETSY S. COX
7/9/2021

DOCUMENT NOT CONSIDERED FINAL UNLESS ALL SIGNATURES COMPLETED

DRAWN BY:	S.D. COOPER	DATE:	6-21
CHECKED BY:	B.S. COX	DATE:	6-21
DESIGN ENGINEER OF RECORD:	B.S. COX	DATE:	6-21

REVISIONS

NO.	BY:	DATE:	NO.	BY:	DATE:
1			3		
2			4		

SHEET NO. S-11
TOTAL SHEETS 15