DocuSign Envelope ID: 946B6E87-D7EB-469E-89EF-1D91CA9D6A95

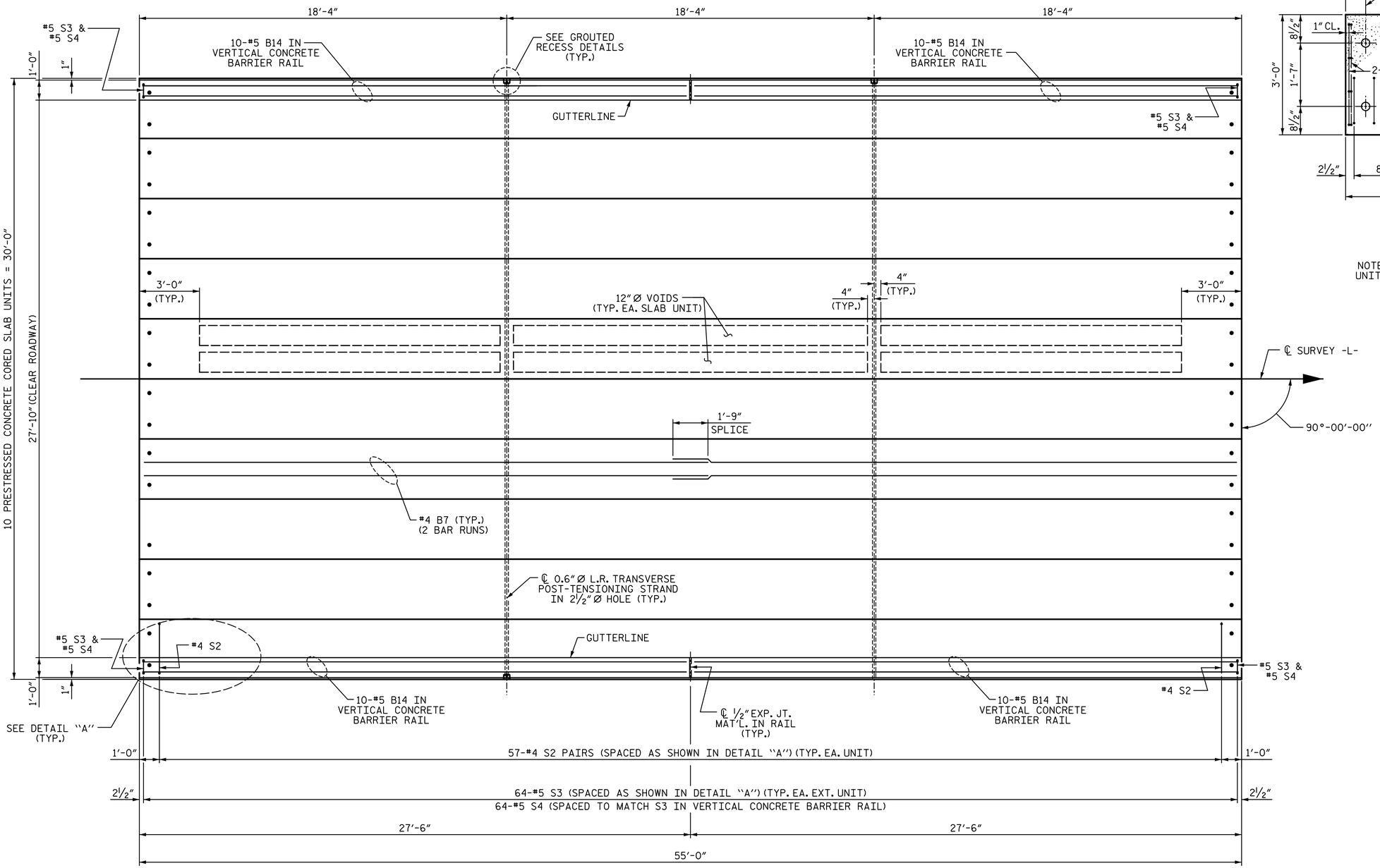

PLAN OF SPAN A

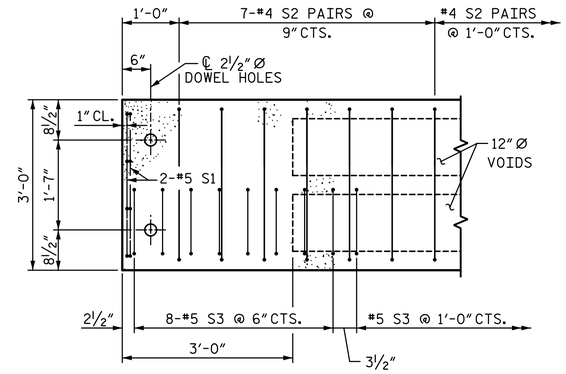

DETAIL "A"

(TYPICAL EACH END OF UNIT)
NOTE: EXTERIOR UNIT SHOWN - INTERIOR UNIT SIMILAR EXCEPT OMIT #5 S3 BARS.

PROJECT NO. 17BP.5.R.70
FRANKLIN COUNTY
STATION: 13+96.50 -L-

SHEET 2 OF 4

STATE OF NORTH CAROLINA
DEPARTMENT OF TRANSPORTATION
RALEIGH
SUPERSTRUCTURE

PLAN OF SPAN A
(55'-0" UNIT)
27'-10" CLEAR ROADWAY
90° SKEW

PLANS PREPARED BY:
SIMPSON ENGINEERS & ASSOCIATES
5640 Dillard Drive
Suite 200
Cary, NC 27518
(919) 852-0468
(919) 852-0598 (Fax)
www.simpsonengr.com
LICENSURE NO. C-2521

STATE OF NORTH CAROLINA PROFESSIONAL SEAL 11268 ENGINEER BETSY S. COX
7/9/2021

DOCUMENT NOT CONSIDERED FINAL UNLESS ALL SIGNATURES COMPLETED

REVISIONS						
NO.	BY:	DATE:	NO.	BY:	DATE:	
1			3			
2			4			

SHEET NO. S-5
TOTAL SHEETS 15

DRAWN BY: S.D. COOPER DATE: 6-21
CHECKED BY: B.S. COX DATE: 6-21
DESIGN ENGINEER OF RECORD: B.S. COX DATE: 6-21

7/8/2021 2:05:32 PM G:\Projects\2016\Division 5 (Mott Macdonald)\17BP5R70 Franklin #28 (90 21CS VCB)\Structures\Drawings\Final\401_17BP5R70_SMU_SUPER.dgn